GEVA elettronica Italy
shop.gevaelettronica.it
email@gevaelettronica.it
https://www.facebook.com/GEVAelettronica

IL MANUALE DI
GEVINO civile v1.1

Compatible Arduino Zero
Manual v1.2

GEVINO products have been designed for civil, domestic, corporate or industrial environments. They have high voltage and high current inputs and outputs, protected against disturbances, electrostatic discharges, magnetic fields, inductive loads, extra voltages and currents.

They comply with EC directives.

It is possible to customize them for more than 50 pieces.

To program Gevino simply connect it to your computer with a USB cable, write some instructions, and press the «Upload» button. It is very rich in libraries for an infinity of modules and sensors. The instructions are quite simple and understandable.

The programming software, also called IDE (Integrated Development Environment), contains many examples from which to take inspiration to write their own listings.

I prodotti GEVINO sono stati progettati per ambienti civili, domestici, aziendali o industriali. Hanno ingressi e uscite ad alta tensione, alta corrente, protetti contro disturbi, scariche elettrostatiche, campi magnetici, carichi induttivi, extra tensioni e correnti.

Sono conformi alle direttive CE.

E' possibile personalizzarle per una quantità superiore a 50 pezzi.

Per programmare Gevino è sufficiente collegarlo al proprio computer con un cavo USB, scrivere qualche istruzione, e premere il tasto «Upload». E' ricchissimo di librerie per un' infinità di moduli e sensori. Le istruzioni sono abbastanza semplici e comprensibili.

Il software di programmazione, chiamato anche IDE (Ambiente Integrato di Sviluppo), contiene numerosi esempi da cui prendere spunto per scrivere i propri listati.

Hardware

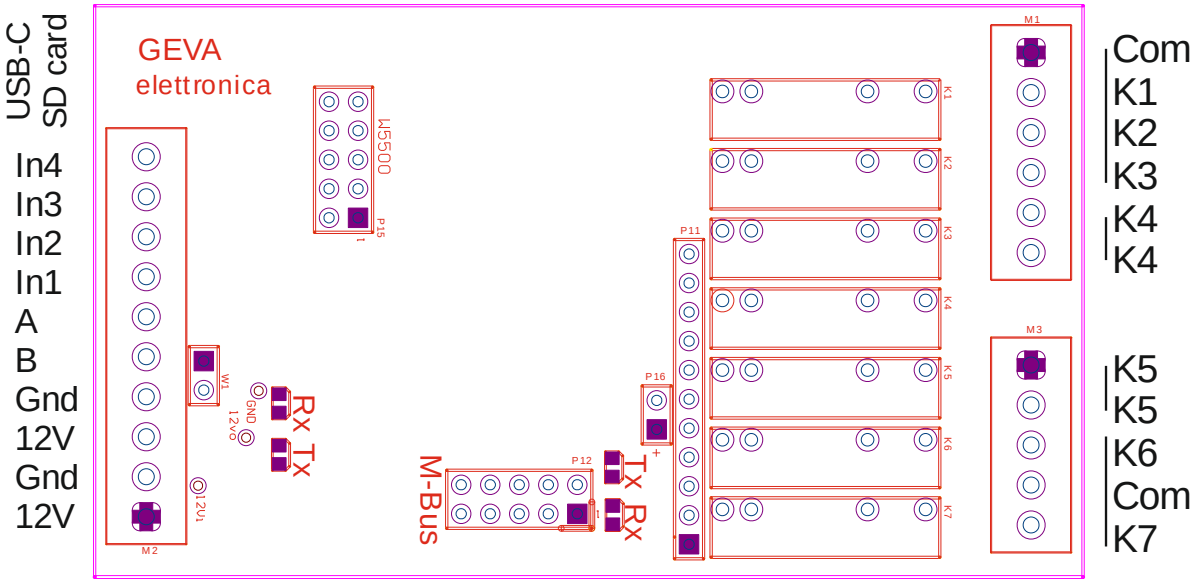

Jumper

W1 = Line Terminator *Terminatore di Linea* 120 Ohm for RS485
Basic model, only with *Modello base, solo con* K5, K6, K7

Note

You can update the program in the GEVINO from the Internet or SD card with a dedicated bootloader.
Si può aggiornare il programma nel GEVINO da internet o SD card con un bootloader dedicato.

Specs / Specifiche

- Vcc 12V
- 3 relays 250VAC/30VDC 5A
- 4 Inputs 12V
- All input can be interrupt. 10Khz max input frequency
- USB-C
- Micro SD
- 19 Leds
- 5 Serial (EPS-SIM800-RS485-Mbus-USB)
- CPU ATSAMD21G18 - Arduino ZERO M0 compatible.
- 48 Mhz, 32-bit ARM® Cortex®-M0+ processor.
- Flash 256KB, RAM 32K
- -40°C +85°C Working temperature

Optional

- 4 Relays, Total 7, Only in the absence of the Ethernet module.
- Ethernet W5500
- WiFi ESP01
- Bluetooth HC-xx
- SIM modem SIM800L
- M-Bus master
- RTC with battery
- 220v to 12v Internal power supply.
- OLED display 128x128 pixel
- Bootloader to upload firmware from Micro SD

Utilization / Utilizzo

ARDUINO IDE https://www.arduino.cc/en/main/software
Install zero Compiler https://www.arduino.cc/en/Guide/ArduinoZero
Choose Board «Arduino/Genuino Zero (Native USB Port)»
Use the Arduino Zero reference guide.
See also the GEVINO Common manual

Accessories /Accessori

Open GEVINO Commond Document for other module

M-Bus master on Serial2	

SerCom

Six Serial Communication Interfaces, each configurable to operate as either:
• USART with full-duplex and single-wire half-duplex configuration
• I2C up to 3.4MHz
• SPI
• LIN slave
https://www.arduino.cc/en/Tutorial/SamdSercom
https://learn.adafruit.com/using-atsamd21-sercom-to-add-more-spi-i2c-serial-ports/overview

SerialUSB	USB	CS	Reset	Int	Tx En
Serial	ESP-WiFi Bluetooth				
Serial1	RS485				A0
Serial2	M-Bus Master				
Serial3	SIM800L Bluetooth				
I2C	RTC DS3231				
“	OLED				
SPI	SD card reader	12			
“	W5500 ETH	5	---	---	

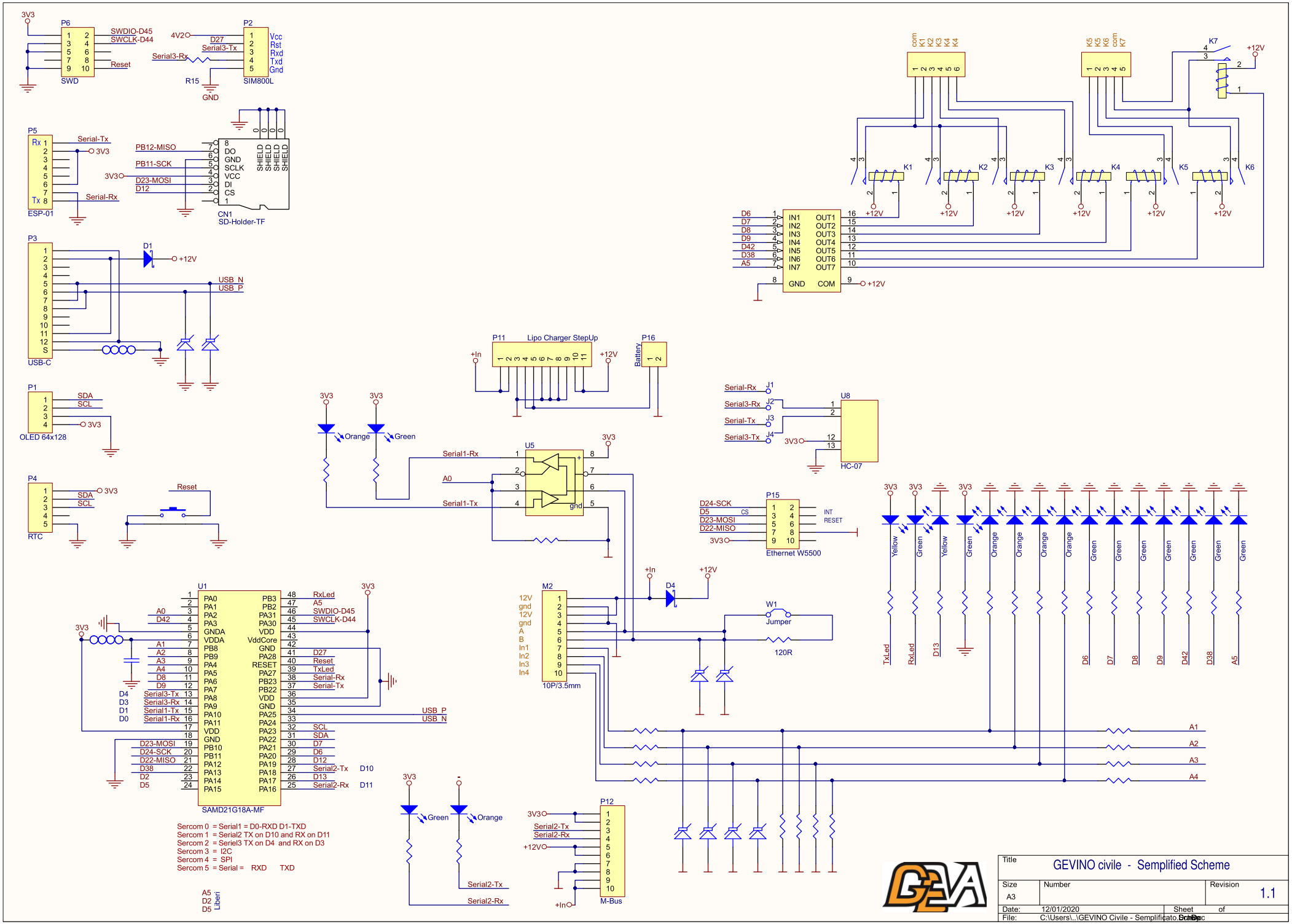
P6
SWD
SWDIO-D45
SWCLK-D44
Reset
P2
SIM800L
Vcc
Rst
Rxd
Txd
Gnd
4V2
D27
Serial3-Tx
Serial3-Rx
R15
GND
P5
ESP-01
Serial-Tx
Serial-Rx
3V3
CN1
SD-Holder-TF
PB12-MISO
PB11-SCK
D23-MOSI
D12
SHIELD
P3
USB-C
D1
+12V
USB_N
USB_P
P1
OLED 64x128
SDA
SCL
P4
RTC
Reset
P11
Lipo Charger StepUp
+In
P16
Battery
Orange
Green
U5
Serial1-Rx
Serial1-Tx
A0
gnd
J1
J2
J3
J4
U8
HC-07
P15
Ethernet W5500
D24-SCK
D5
D23-MOSI
D22-MISO
CS
INT
RESET
K1
K2
K3
K4
K5
K6
K7
com
IN1
IN2
IN3
IN4
IN5
IN6
IN7
OUT1
OUT2
OUT3
OUT4
OUT5
OUT6
OUT7
GND
COM
D6
D7
D8
D9
D42
D38
A5
U1
SAMD21G18A-MF
PA0
PA1
PA2
PA3
GNDA
VDDA
PB8
PB9
PA4
PA5
PA6
PA7
PA8
PA9
PA10
PA11
VDD
GND
PB10
PB11
PA12
PA13
PA14
PA15
PB3
PB2
PA31
PA30
VddCore
PA28
RESET
PA27
PB23
PB22
PA25
PA24
PA23
PA22
PA21
PA20
PA19
PA18
PA17
PA16
RxLed
SWDIO-D45
SWCLK-D44
D27
Reset
TxLed
Serial-Rx
Serial-Tx
USB_P
USB_N
SCL
SDA
D7
D6
D12
D13
Serial2-Tx
Serial2-Rx
D10
D11
A1
A2
A3
A4
M2
10P/3.5mm
12V
gnd
A
B
In1
In2
In3
In4
D4
W1
Jumper
120R
Yellow
Green
Orange
TxLed
RxLed
D13
D6
D7
D8
D9
D42
D38
A5
P12
M-Bus
Serial2-Tx
Serial2-Rx
+In
Sercom 0 = Serial1 = D0-RXD D1-TXD
Sercom 1 = Serial2 TX on D10 and RX on D11
Sercom 2 = Seriel3 TX on D4 and RX on D3
Sercom 3 = I2C
Sercom 4 = SPI
Sercom 5 = Serial = RXD TXD
A5
D2
D5
Liberi
Title
GEVINO civile - Semplified Scheme
Size
A3
Number
Revision
1.1
Date: 12/01/2020
Sheet of
File: C:\Users\..\GEVINO Civile - Semplificato.SchDoc